LiGHT SKY

www.lightsky.com.cn

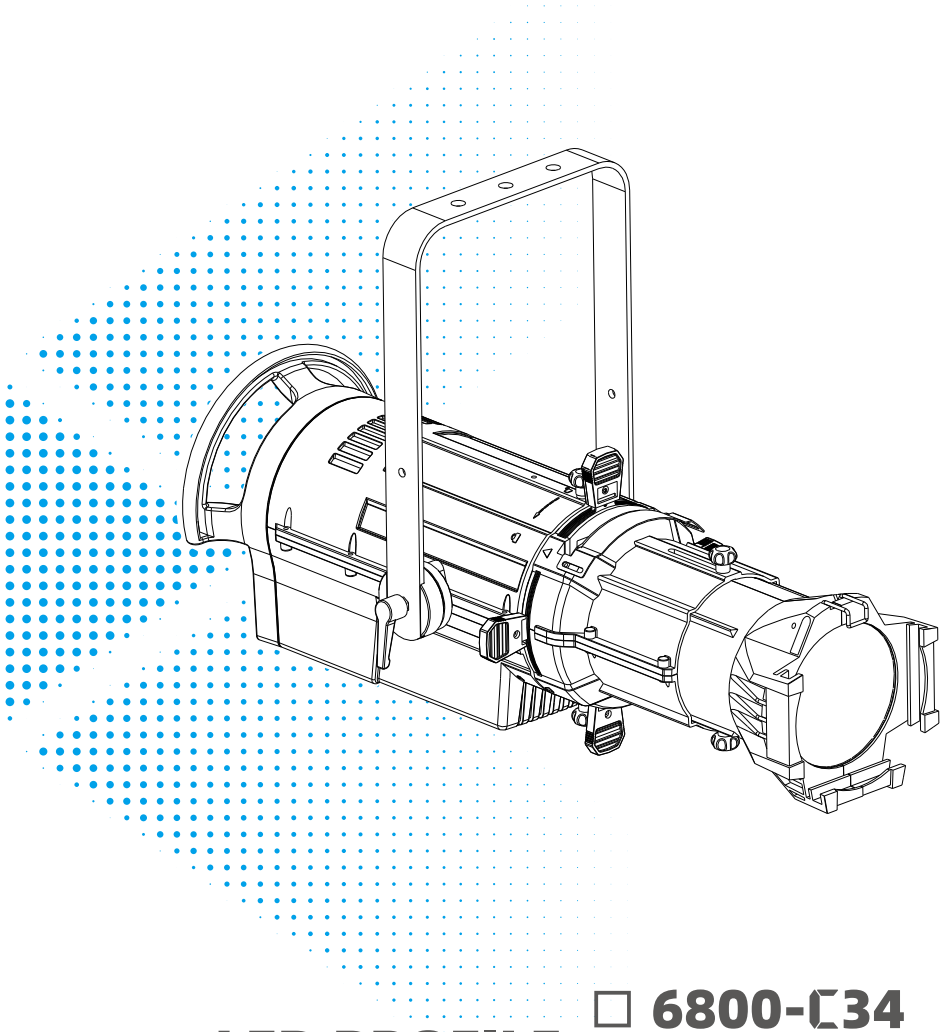

LED PROFILE

☐ 6800-C34

☐ 8800-C42

User Manual

Please read the instruction carefully before use

Fly Dragon Lighting Equipment Co., Ltd.

Add : NO.4 JINGNENG ROAD 1, HUADU DISTRICT, GUANGZHOU, CHINA.
Tel : 020-61828288 Fax : 020-61828188 Postal Code : 510820
Email : flydragon@lightsky.com.cn

Social Media

LiGHT SKY Wechat

INDEX

1.Safety information.....**2**
2.Skill specifications and Performance trait **3**
3.Photometric data.....**4**
4.Control panel.....**6**
5.Dimensional drawings.....**7**
6.Component name.....**7**
7.Lens tube.....**8**
8.Install fixture.....**8**
9.Mounting and installation.....**9**
10. Power supply and signal connection.....**10**
11. Menu setting.....**12**
12. Channel function.....**17**
13. Circuit connecting diagram.....**24**
14. Troubeshooting.....**25**
15. Cleaning and Maintenances.....**26**
16. Duty exonerative and Copyright protection.....**26**

UNPACKING: Thank you for purchasing our company products. Every product has been thoroughly tested and has been shipped in perfect operating condition. Carefully check the shipping carton for damage that may have occurred during shipping. If the carton appears to be damaged, carefully inspect your fixture for damage and be sure all accessories necessary to operate the fixture have arrived intact. In the event damage has been found or parts are missing, please contact our customer support team for further instructions. Inside the box you should find: the fixture, a DMX XLR cable, a power cable, and this user manual.

SAFETY INSTRUCTIONS

Notice: To guarantee proper and consistent operation, it is important to follow the guidelines in this manual. Our company will not accept responsibility for damages resulting from the misuse of this fixture due to the disregard of the information printed in this manual.

■Installation

●Make sure all parts for fixing the projector are in a good state of repair.

●Make sure the point of anchorage is stable before positioning the projector.

●The safety chain must be properly hooked onto the fitting and secured to the framework, so that, if the primary support system fails,the fitting falls as little as possible.

●If the safety chain gets used, it needs to be replaced with a genuine spare.

■Protection against electrical shock

●Connection must be made to a power supply system fitted with efficient earthing (Class I appliance according to standard EN 60598-1).

●It is,moreover, recommended to protect the supply lines of the projectors from indirect contact and/or shorting to earth by using appropriately sized residual current devices.

■Connection to mains supply

●Connection to the electricity mains must be carried out by a qualified electrical installer.

●Check that the mains frequency and voltage correspond to those for which the projector is designed as given on the electrical data label.

●This label also gives the input power to which you need to refer to evaluate the maximum number of fittings to connect to the electricity line, in order to avoid overloading.

●Don't use the power cable when the insulation is damaged.

●It must be the manufacturer or distributor or the professional person to change the damaged power cable in order to avoid any dangerous.

■In order to ensure the light could operate normally, the ambient temperature couldn't be higher than 38℃ and no lower than- 2℃.

■Under normal condition, the highest sectional surface temperature may be up to 60 ℃.

■Never open this fixture while in use.

■Never look directly into the light source. You risk injury to your retina, which may induce blindness.

■Do not attempt to operate this fixture if the power cord has become damaged or frayed.

■Please be aware that damages caused by modifications to the device are not subject to warranty.

■The products referred to in this manual conform to the European Community Directives to which they are subject:

●Low Voltage 2014/35/EU

●Electromagnetic Compatibility 2014/30/EU

SKILL SPECIFICATIONS AND PERFORMANCE TRAIT

- Voltage：AC100~240V 50/60Hz.
- Power：C34:280W C42:300W.
- LED brand：OSRAM
- LED chip：3W*90PCS(Red、Red orange、Green mint 、Green、Blue、Indigo).
- LED power：200W
- LED life：30000H.(*Lifespan subject to factors including environmental conditions, dimming control, power supply, voltage, switching cycles, operation mode and others.)
- CRI index ：91-97
- TLCI index :91-97
- Colour temperature:2800K-10000K
- Lens degree：standard 19°；selective 26°、36°、50°
- Strobe:1-30 times/ second .
- Dimmer ： 65536 class dimmer.
- Total Lumen:C34:6800LM,C42:8800LM
- Luminance Efficiency:C34:34.C42:42
- Control Mode: DMX512 .
- Channel: 11CH （Standard）； 1CH Mode ; 2CH Mode; HSI(6CH)/HSI+7(13CH)；
  HSIC(7CH)/HSIC+7(14CH)； Studio(6CH)
- Light size:725×305×482MM
- Single carton size：340×290×745MM (LED Profile)
- N.W.：7.3KG G.W.：9.5KG
- Four carton size：710×610×775MM
- N.W.：29.2KG G.W.：40.7KG
- Single carton size：340×290×380MM (Lens tube)
- N.W.：2.4KG G.W.：3.5KG
- Four carton size：710×610×410MM
- N.W.：9.6KG G.W.：16.2KG

PHOTOMETRIC DATA

8800-C42:lens 36°

Lux (fc)				
White	980 (91)	276 (26)	123 (11)
Red	91 (8)	26 (2)	12 (1)
Orange red	197 (18)	56 (5)	25 (2)
Light green	850 (79)	242 (22)	108 (10)
Green	70 (7)	21 (2)	9 (1)
Blue	60 (6)	17 (2)	8 (1)

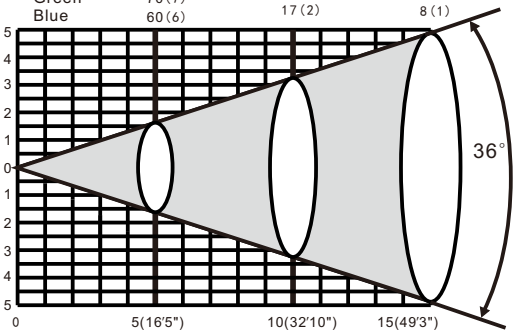

Distance m(ft in)	0	5(16'5")	10(32'10")	15(49'3")
Diameter m(ft in)	0	3.2(10'5")	6.5(21'3")	9.7(25'2")

8800-C42:lens 26°

Lux (fc)				
White	1590 (148)	430 (40)	185 (17)
Red	155 (14)	43 (4)	18 (2)
Orange red	306 (28)	83 (8)	35 (3)
Light green	1360 (126)	370 (34)	156 (14)
Green	121 (11)	32 (3)	14 (1)
Blue	102 (9)	26 (2)	12 (1)

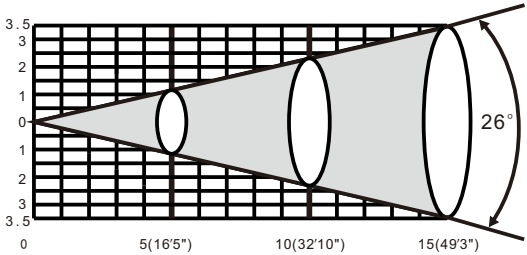

Distance m(ft in)	0	5(16'5")	10(32'10")	15(49'3")
Diameter m(ft in)	0	2.3(7'6")	4.6(15')	6.9(22'7")

8800-C42:lens 19°

Lux (fc)				
White	2260 (210)	615 (57)	276 (26)
Red	208 (19)	57 (5)	28 (3)
Orange red	434 (40)	115 (11)	56 (5)
Light green	2000 (186)	540 (50)	250 (23)
Green	171 (16)	45 (4)	21 (2)
Blue	150 (14)	40 (4)	18 (2)

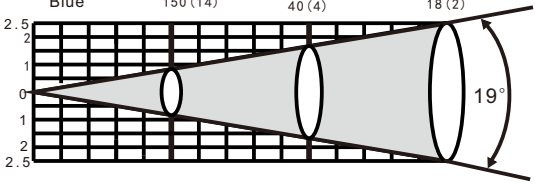

Distance m(ft in)	0	5(16'5")	10(32'10")	15(49'3")
Diameter m(ft in)	0	1.7(5'6")	3.3(10'9")	5(16'5")

6800-C34:lens 36°

Lux (fc)				
	White	825 (77)	224 (21)	102 (9)
	Red	89 (8)	24 (2)	11 (1)
	Orange red	180 (17)	44 (4)	21 (2)
	Light green	700 (65)	187 (17)	84 (8)
	Green	59 (5)	16 (2)	7 (1)
	Blue	56 (5)	16 (2)	7 (1)

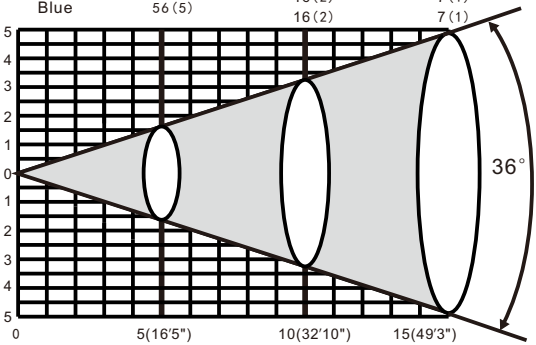

Distance m(ft in)	0	5(16′5")	10(32′10")	15(49′3")
Diameter m(ft in)	0	3.2(10′5")	6.5(21′3")	9.7(25′2")

6800-C34:lens 26°

Lux (fc)				
	White	1240 (115)	330 (31)	149 (14)
	Red	132 (12)	34 (3)	16 (1)
	Orange red	236 (22)	64 (6)	30 (3)
	Light green	1030 (8)	270 (25)	122 (11)
	Green	88 (7)	23 (2)	11 (1)
	Blue	80 (9)	21 (2)	9 (1)

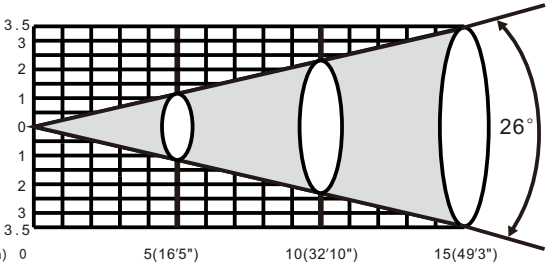

Distance m(ft in)	0	5(16′5")	10(32′10")	15(49′3")
Diameter m(ft in)	0	2.3(7′6")	4.6(15′)	6.9(22′7")

6800-C34:lens 19°

Lux (fc)				
	White	1850 (172)	480 (45)	224 (21)
	Red	195 (18)	54 (5)	24 (2)
	Orange red	350 (32)	98 (9)	44 (4)
	Light green	1560 (145)	406 (38)	185 (17)
	Green	133 (12)	35 (3)	16 (2)
	Blue	127 (12)	33 (3)	15 (2)

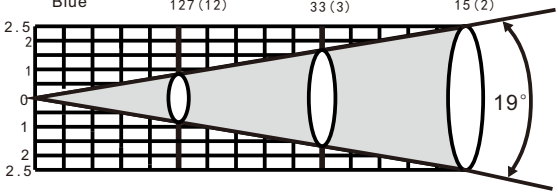

Distance m(ft in)	0	5(16′5")	10(32′10")	15(49′3")
Diameter m(ft in)	0	1.7(5′6")	3.3(10′9")	5(16′5")

CONTROL PANEL AND ATTACHMENT

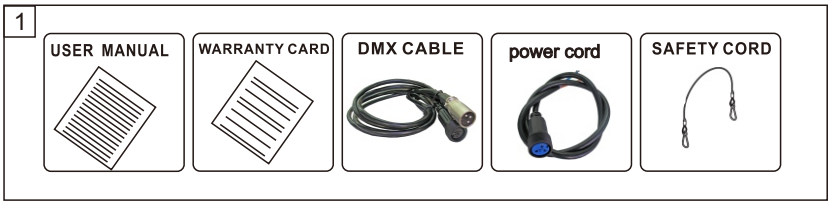

Attachment contents- Fig. 1

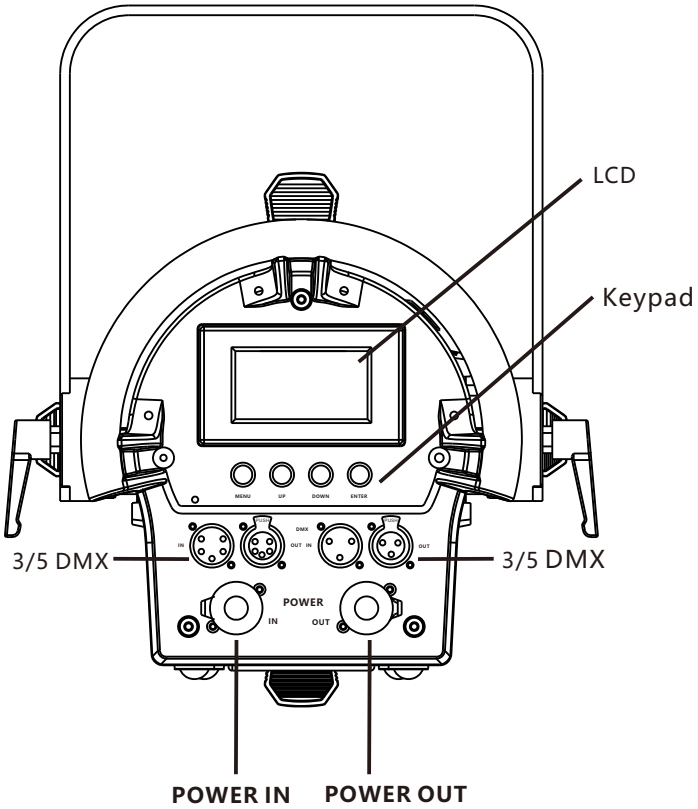

DIMENSIONAL DRAWINGS

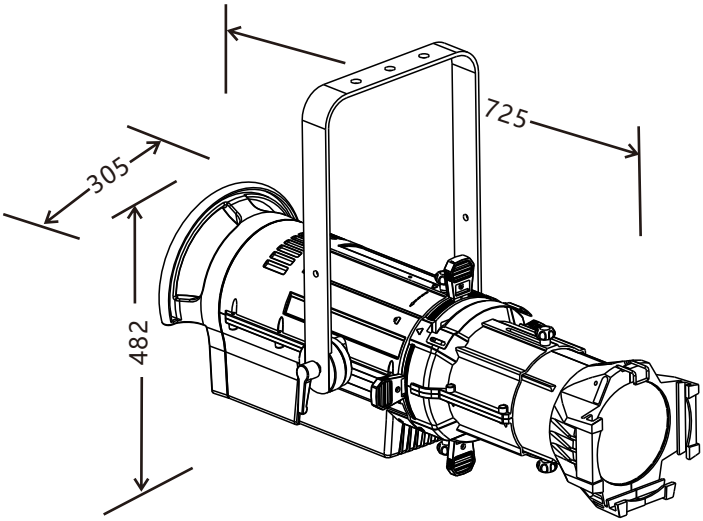

COMPONENT NAME

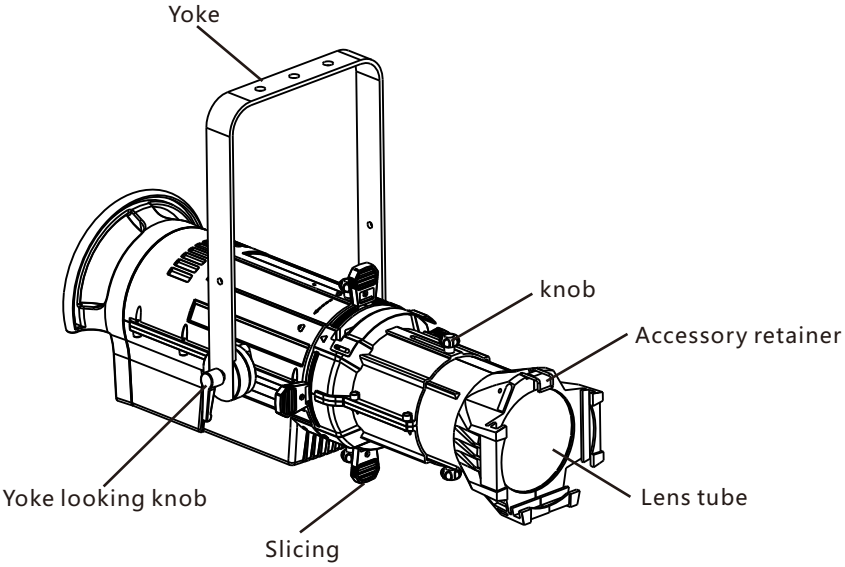

LENS TUBE

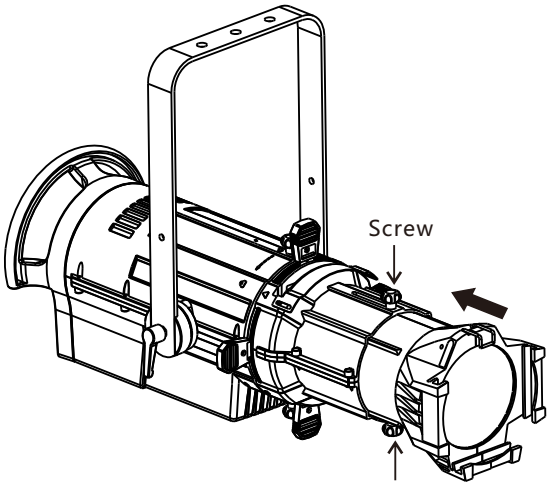

Step 1:Slide the lens into the shutter barrel.
Step 2:Tighten the lens focus screw.

INSTALL FIXTURE

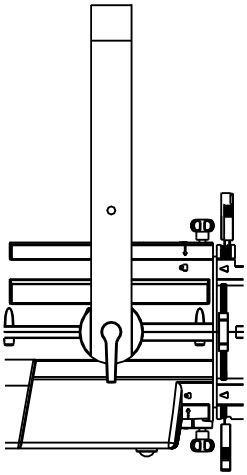

General use position

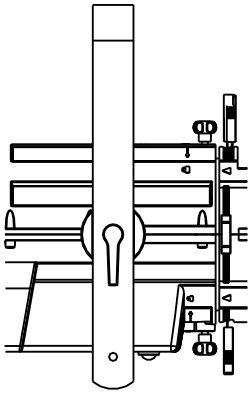

Low clearance position

MOUNTING AND INSTALLATION

Cautions:

For added protection mount the fixtures in areas outside walking paths, seating areas, and away from areas were unauthorized personnel might reach the fixture. Before mounting the fixture to any surface, make sure that the installation area can hold a minimum point load of 10 times the device's weight. Fixture installation must always be secured with a secondary safety attachment, such as an appropriate safety cable. To avoid injury, never stand directly below the device when mounting, removing, or servicing the fixture.

Mounting points:Overhead mounting requires extensive experience, including amongst others calculating working load limits, a fine knowledge of the installation material being used, and periodic safety inspection of all installation material and the fixture. If you lack these qualifications, do not attempt the installation yourself. Improper installation can result in bodily injury. Be sure to complete all rigging and installation procedures before connecting the main power cord to the appropriate wall outlet.

cautton! Be sure a qualified electrician performs all electrical connections.

Mounting:

Our company is fully operational in any mounting position, hanging upside-down, side mounted, or set on a flat level surface, etc. Be sure this fixture is kept at least 0.5m (about 1.6feet) away from any flammable materials (decoration etc.).

When clamp mounting; always use and install the supplied safety cable as an added safety measure to prevent accidental damage in the event of a clamp failure. See the image below.

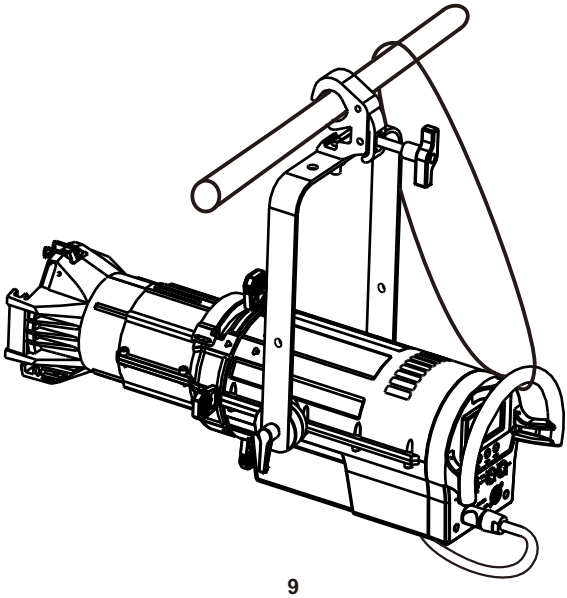

POWER SUPPLY AND SIGNAL CONNECTION

1. Power supply

Use the professional plug to connect the projector and main power supply. Please pay attention to the voltage, frequency the same as the mentioned on the projector. Suggest each light has separately switched of the power supply so that could turn on or turn off each projector desultorily.

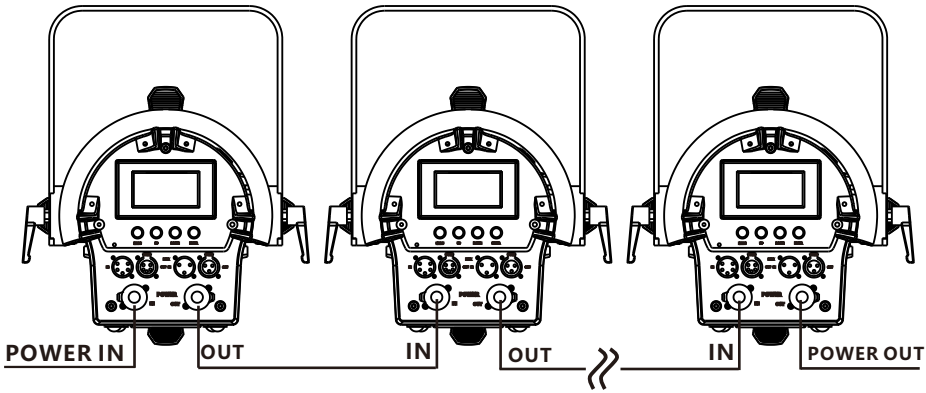

2.Signal connection

Please use the round 3/5-pin XLR plugs &sockets offered by menu facture to connect the first projector's output to the second projector' input and connect the second projector's output to the third device's input. And in the same way for the rest, eventually connect the last device's output, all the devices are together as the following figure.

The devices' control signal output or input by using the 3/5-pin XLR pug and socket. If need to long then the communication cable, please make sure the both side of 3/5-pin plug is one to one. (one to one, two to two, three to three). Otherwise, the communication cable will be interrupted.

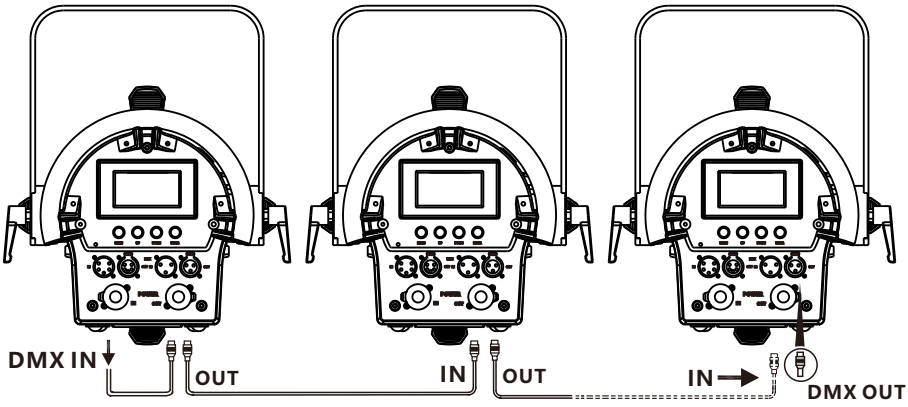

Connecting to the control signal line (DMX)

◎ Please use the round 3 or 5-pin XLR plugs &sockets offered by menu facture to connect the first projector's output to the second projector' input and connect the second projector's output to the third projector's input. And in the same way for the rest,eventually connect the last projector's output,all the projectors are together.

◎The projectors's control signal output or input by using the 3 or 5-pin XLR pug and socket.If need to lengthen the communication cable,please make sure the both side of 3 or 5-pin plug is one to one . (one to one,two to two,three to three).Otherwise,the communication cable will be interrupted.The communicate cable is 2-cord screened cable 75Ω resistance with each core is at least a 0.5mm diameter.(**Caution:**All the inside leading wire of 3 or 5-pin XLR plug couldn't touch each other or plinth).

◎Recommend to use the DMX signal terminator for the installation to avoid the electronic noise dama -ge the digital control signal.Simply speaking,DMX terminator is an XLR connector with a 120Ω 1/2W resistor connected across pin 2 and 3.Which is then plugged into the output socket on the last projec -tor in the chain.Refer to the connection.

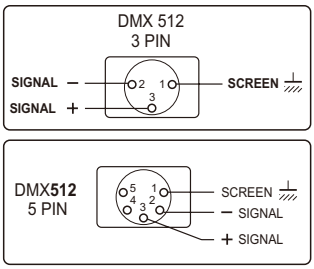

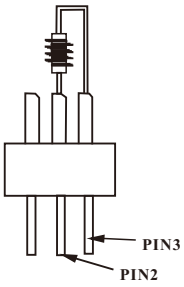

MENU SETTING

1.After the power is switched on, the display screen displays LOGO

2.Button operation

- ●MENU: back Button;
- ●UP: Page up or increase;
- ●DOWN: Page down or reduce;
- ●ENTER: OK button

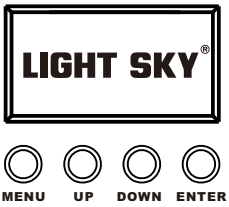

3.Menu operation

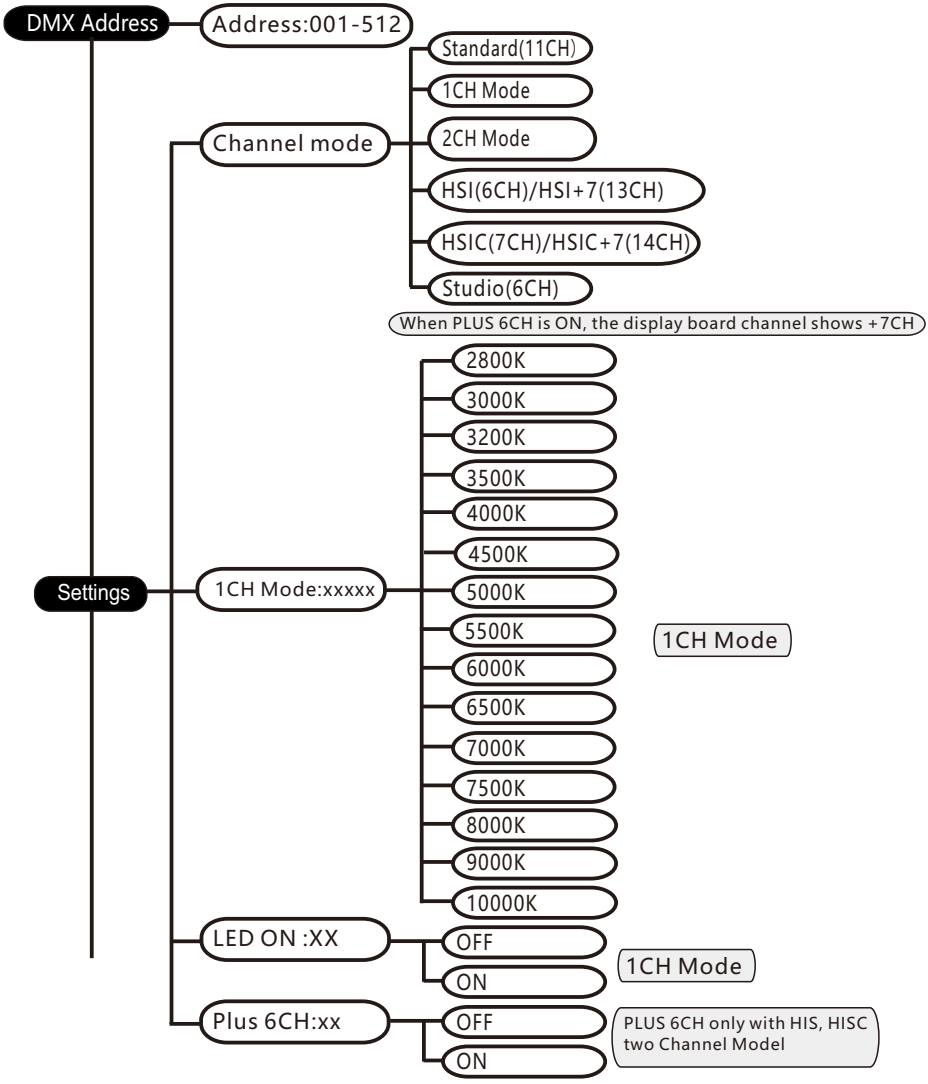

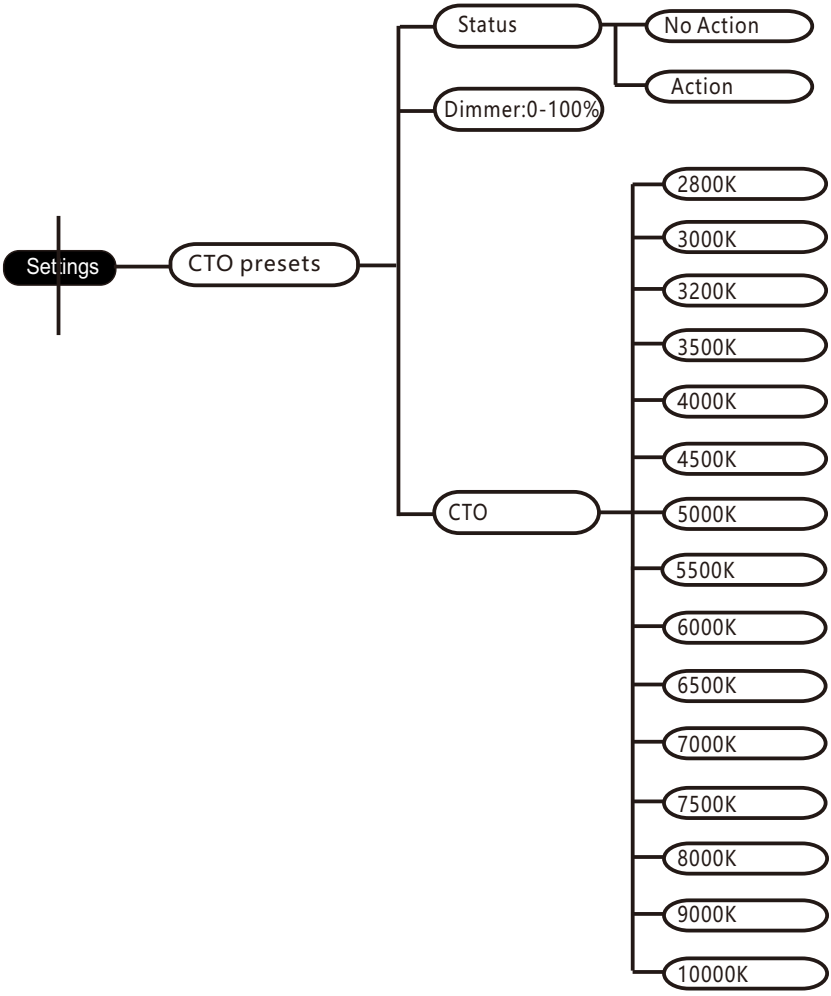
Settings
CTO presets
Status
No Action
Action
Dimmer:0-100%
CTO
2800K
3000K
3200K
3500K
4000K
4500K
5000K
5500K
6000K
6500K
7000K
7500K
8000K
9000K
10000K

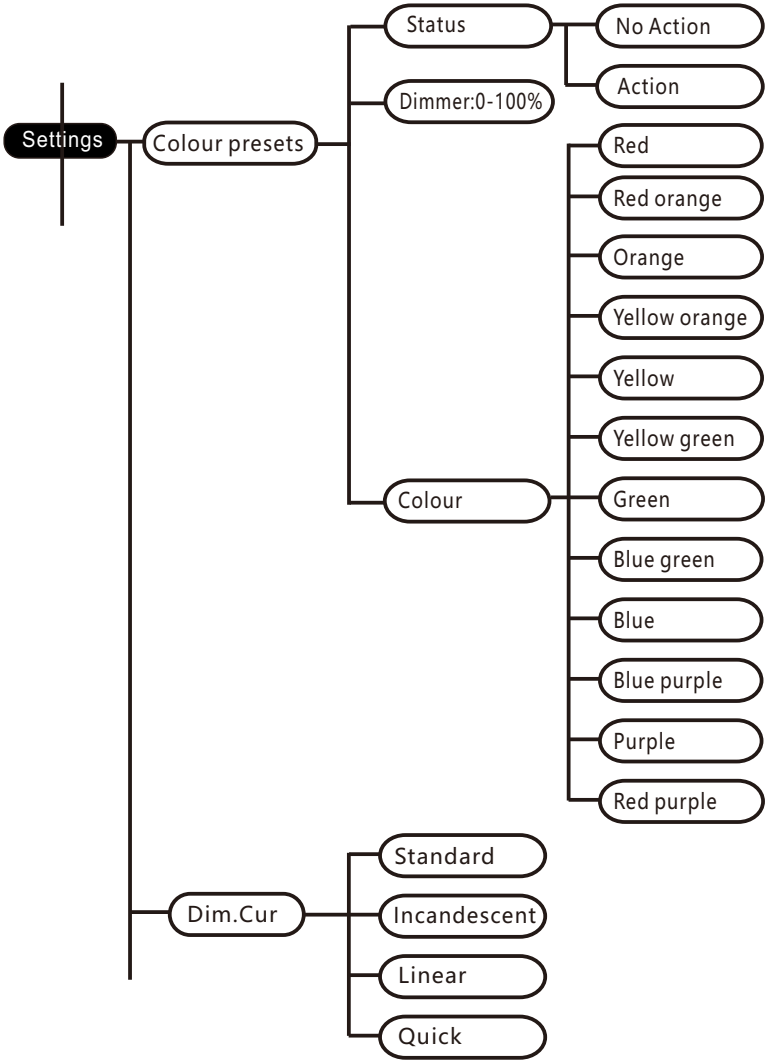
Settings
Colour presets
Status
No Action
Action
Dimmer:0-100%
Colour
Red
Red orange
Orange
Yellow orange
Yellow
Yellow green
Green
Blue green
Blue
Blue purple
Purple
Red purple
Dim.Cur
Standard
Incandescent
Linear
Quick

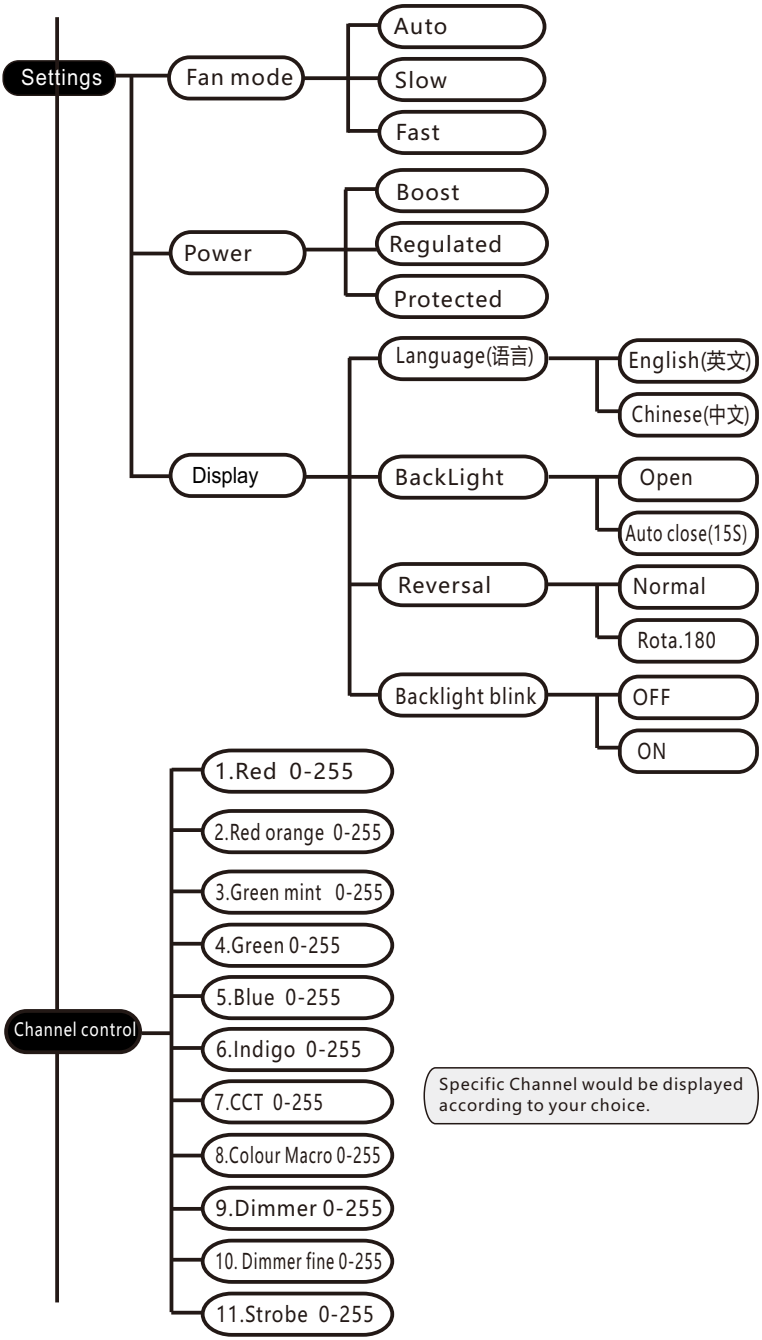
Settings
Fan mode
Auto
Slow
Fast
Power
Boost
Regulated
Protected
Display
Language(语言)
English(英文)
Chinese(中文)
BackLight
Open
Auto close(15S)
Reversal
Normal
Rota.180
Backlight blink
OFF
ON
Channel control
1.Red 0-255
2.Red orange 0-255
3.Green mint 0-255
4.Green 0-255
5.Blue 0-255
6.Indigo 0-255
7.CCT 0-255
8.Colour Macro 0-255
9.Dimmer 0-255
10. Dimmer fine 0-255
11.Strobe 0-255
Specific Channel would be displayed according to your choice.

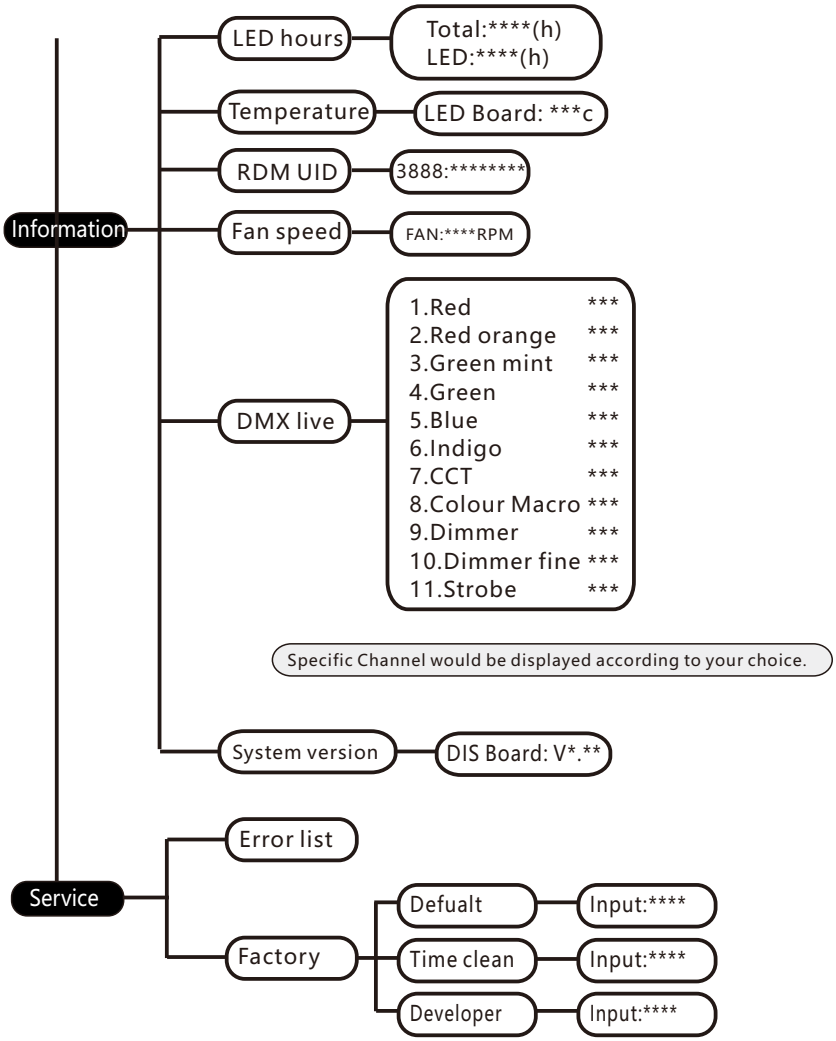
Information
LED hours
Total:****(h)
LED:****(h)
Temperature
LED Board: ***c
RDM UID
3888:********
Fan speed
FAN:****RPM
DMX live
1.Red ***
2.Red orange ***
3.Green mint ***
4.Green ***
5.Blue ***
6.Indigo ***
7.CCT ***
8.Colour Macro ***
9.Dimmer ***
10.Dimmer fine ***
11.Strobe ***
Specific Channel would be displayed according to your choice.
System version
DIS Board: V*.**
Service
Error list
Factory
Defualt
Input:****
Time clean
Input:****
Developer
Input:****

CHANNEL FUNCTION

Standard(11CH)

CHANNEL	DMX VALUE	%	FUNCTION
1	0-255	0-100	Red
2	0-255	0-100	Red orange
3	0-255	0-100	Green mint
4	0-255	0-100	Green
5	0-255	0-100	Blue
6	0-255	0-100	Indigo
7			CCT
	0-3	0-1.18	NO function
	4-6	1.57-2.35	2800K
	7-21	2.75-8.24	From 2800K to 3000K
	22-24	8.63-9.41	3000K
	25-39	9.80-15.29	From 3000K to 3200K
	40-42	15.69-16.47	3200K
	43-57	16.86-22.35	From 3200K to 3500K
	58-60	22.75-23.53	3500K
	61-75	23.92-29.41	From 3500K to 4000K
	76-78	29.80-30.59	4000K
	79-93	30.98-36.47	From 4000K to 4500K
	94-96	36.86-37.65	4500K
	97-111	38.04-43.53	From 4500K to 5000K
	112-114	43.92-44.71	5000K
	115-129	45.10-50.59	From 5000K to 5500K
	130-132	50.98-51.76	5500K
	133-147	52.16-57.65	From 5500K to 6000K
	148-150	58.04-58.82	6000K
	151-165	59.22-64.71	From 6000K to 6500K

CHANNEL	DMX VALUE	%	FUNCTION
7	166-168	65.10-65.88	6500K
	169-183	66.27-71.76	From 6500K to 7000K
	184-186	72.16-72.94	7000K
	187-201	73.33-78.82	From 7000K to 7500K
	202-204	79.22-80.00	7500K
	205-219	80.39-85.88	From 7500K to 8000K
	220-222	86.27-87.06	8000K
	223-237	87.45-92.94	From 8000K to 9000K
	238-240	93.33-94.12	9000K
	241-254	94.51-99.61	From 9000K to 10000K
	255	100	10000K
8	0-255	0-100	Colour Macro
9	0-255	0-100	Dimmer
10	0-255	0-100	Dimmer fine
11			Strobe
	0-9	0-3.53	NO function
	10-49	3.92-19.22	Slow closing,fast opening,slow → fast
	50-89	19.61-34.90	Fast closing,slow opening,slow → fast
	90-119	35.29-46.67	Slow closing,slow open,slow → fast
	120-179	47.06-70.20	Random strobe,slow→fast
	180-249	70.59-97.65	Synchronous strobe,slow→fast
	250-255	98.04-100	NO function

1CH Mode

CHANNEL	DMX VALUE	%	FUNCTION
1	0-255	0-100	Dimmer

2CH Mode

CHANNEL	DMX VALUE	%	FUNCTION
1	0-255	0-100	Dimmer
2	0-255	0-100	CCT

HSI(6CH)/HSI+7(13CH)

CHANNEL	DMX VALUE	%	FUNCTION	
1	0-255	0-100	Hue	
2	0-255	0-100	Hue fine	
3	0-255	0-100	Saturation	
4	0-255	0-100	Dimmer	
5	Strobe			
	0-9	0-3.53	NO function	
	10-49	3.92-19.22	Slow closing,fast opening,slow → fast	
	50-89	19.61-34.90	Fast closing,slow opening,slow → fast	
	90-119	35.29-46.67	Slow closing,slow open,slow → fast	
	120-179	47.06-70.20	Random strobe,slow→fast	
	180-249	70.59-97.65	Synchronous strobe,slow→fast	
	250-255	98.04-100	NO function	
6	NC			
7	+6CH			Only PLUS 6CH is ON, 7 to 13 CH work.
	0-128	0-50.2	Disable plus 6	
	129-255	50.59-100	Enable plus 6	
8	0-255	0-100	Red	
9	0-255	0-100	Red orange	
10	0-255	0-100	Green mint	
11	0-255	0-100	Green	
12	0-255	0-100	Blue	
13	0-255	0-100	Indigo	

HSIC(7CH)/HSIC+7(14CH)

CHANNEL	DMX VALUE	%	FUNCTION
1	0-255	0-100	Hue
2	0-255	0-100	Hue fine
3	0-255	0-100	Saturation
4	0-255	0-100	Dimmer
5			Strobe
	0-9	0-3.53	NO function
	10-49	3.92-19.22	Slow closing,fast opening,slow → fast
	50-89	19.61-34.90	Fast closing,slow opening,slow → fast
	90-119	35.29-46.67	Slow closing,slow open,slow → fast
	120-179	47.06-70.20	Random strobe,slow→fast
	180-249	70.59-97.65	Synchronous strobe,slow→fast
	250-255	98.04-100	NO function
6			NC
7			CCT
	0-3	0-1.18	NO function
	4-6	1.57-2.35	2500K
	7-21	2.75-8.24	From 2500K to 2800K
	22-24	8.63-9.41	2800K
	25-39	9.80-15.29	From 2800K to 3000K
	40-42	15.69-16.47	3000K
	43-57	16.86-22.35	From 3000K to 3200K
	58-60	22.75-23.53	3200K
	61-75	23.92-29.41	From 3200K to 3500K
	76-78	29.80-30.59	3500K
	79-93	30.98-36.47	From 3500K to 4000K
	94-96	36.86-37.65	4000K

CHANNEL	DMX VALUE	%	FUNCTION	
7	97-111	38.04-43.53	From 4000K to 4500K	
	112-114	43.92-44.71	4500K	
	115-129	45.10-50.59	From 4500K to 5000K	
	130-132	50.98-51.76	5000K	
	133-147	52.16-57.65	From 5000K to 5500K	
	148-150	58.04-58.82	5500K	
	151-165	59.22-64.71	From 5500K to 6000K	
	166-168	65.10-65.88	6000K	
	169-183	66.27-71.76	From 6000K to 6500K	
	184-186	72.16-72.94	6500K	
	187-201	73.33-78.82	From 6500K to 7000K	
	202-204	79.22-80.00	7000K	
	205-219	80.39-85.88	From 7000K to 7500K	
	220-222	86.27-87.06	7500K	
	223-237	87.45-92.94	From 7500K to 8000K	
	238-240	93.33-94.12	8000K	
	241-251	94.51-98.43	From 8000K to 9000K	
	252-254	98.82-99.61	9000K	
	255	100	10000K	
8			+6CH	Only PLUS 6CH is ON, 8 to 14 CH work.
	0-128	0-50.2	Disable plus 6	
	129-255	50.59-100	Enable plus 6	
9	0-255	0-100	Red	
10	0-255	0-100	Red orange	
11	0-255	0-100	Green mint	
12	0-255	0-100	Green	
13	0-255	0-100	Blue	
14	0-255	0-100	Indigo	

Studio

CHANNEL	DMX VALUE	%	FUNCTION
1	0-255	0-100	Dimmer
2	0-255	0-100	White Point
3	0-255	0-100	Tint
4	NC		
5	Strobe		
	0-9	0-3.53	NO function
	10-49	3.92-19.22	Slow closing,fast opening,slow → fast
	50-89	19.61-34.90	Fast closing,slow opening,slow → fast
	90-119	35.29-46.67	Slow closing,slow open,slow → fast
	120-179	47.06-70.20	Random strobe,slow→fast
	180-249	70.59-97.65	Synchronous strobe,slow→fast
	250-255	98.04-100	NO function
6	NC		

CIRCUIT CONNECTING DIAGRAM

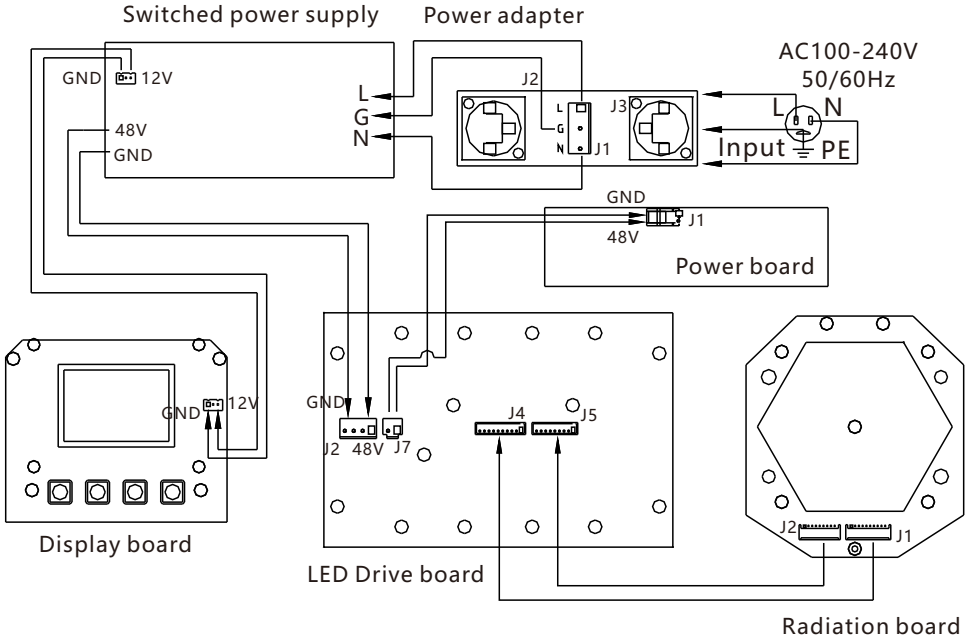

TROUBLE DISPOSE

It is recommended some solution for some normal trouble shooting. Any inextricability problems should always be handling by the professional person. Disconnect the power supply before maintenance the light.

●LCD off:

1.Please check if install the suitable voltage

2.Please check whether the led will reach the end of their life can explode; please replace a same description led.

3.Please check if the power supply is enough.

4.Please check whether the DMX 512 controller pass the "turn on" order.

●Though the light is lighting, but it couldn't accept the control order:

1.Please check the start code address and the function option are correct.

2.Please check whether the communicate control cable is on good connection or the cable is too long or interrupt.

3.Please check the control system is not valid, check the signal amplifier of chain connected is valid.

4.Please check whether the communicate cable is too long or the other equipment is mutually conjugate.

5.Please arrange the wire well, shorter the signal cable, put the high voltage cable and low voltage cable separately.

6.Add the signal amplify isolator.

7.Signal cable is used the excellent screening doublet (Resistance 75 OHM)

8.The end of the light end and the end resistance.

●The light can't move:

1.Please check if the power supply is suitable for the light voltage data.

2.Please check the light if they are deformation, inside parts is broken, become wet etc will lead the loose contact.

CLEANING AND MAINTENANCE

■**1.**In order to ensure the projector could work normally. It should be kept clean always .The lens should also be regularly cleaned to maintain an optimum light output. Do not use any type of solvent on lens. It will damage the projector.

■**2.**Suggestion: The continue usage of the light don't exceed 4 hours. Or it will shorter the usage of the lamp. Please use the alternative operation to solve this problem.The fixture power ON time is best not over 48 hours, or it would generate lamp protection procedure.

■**3.**Please disconnect the power supply when begin to maintenance take down the light. Please let the parts cool down 10 minute at least then begin to install.

■**4.**Please inspect the lens or other moving parts timing and keep them clear and static. If find anything damaged or looseness must change a lamp or fix the lamp in order to avoid the accident.

CAUTION!
Disconnect from mains before starting maintenance operation.

DUTY EXONERATIVE AND COPYRIGHT PROTECTION

◎Any products broken that didn't according to the instruction is not guarantee to keep it in good repair.

◎The commentary for all the instruction belongs to the supplier in final.

◎No authorize can't copy.